1 Channel Incremental Encoder Interface Input

- ST-5101와 ST-5111은 1 Channel encoder input Module 입니다. 또한 상태표시를 위한 1 Channel output도 함께 제공합니다.
- 이 module은 binary pulses를 count 할 수 있으며, data를 해당 FieldBus를 통해 전송합니다.
- 이 module에는 7개의 상태 LED가 있습니다. 하나는 network 상태 나머지는 모듈의 입출력 상태를 나타냅니다.

Items	Specification (ST-5101)	(ST-5111)
Input Specification		
Input Voltage	5Vdc	24Vdc
Input Current	16.2mA @ 5Vdc	6.1mA @ 24Vdc
Input On-State Current	Input Current ≥ 5mA	Input Current ≥ 2.9mA
Input On-State Voltage	Input Voltage ≥ 2.6Vdc	Input Voltage ≥ 12Vdc
Output On-State Current	Input Current ≤ 0.25mA	Input Current ≤ 0.15mA
Output On-State Voltage	Input Voltage ≤ 1.25Vdc	Input Voltage ≤ 1.8Vdc
Max. On-State Voltage	6V	30V
Max. Input Frequency	Max. 1.5MHz	
Input Filter Selections	Bypass / 1usec / 5usec / 10usec / 50usec / 100usec 500usec / 1msec / 5msec / 10msec	
Number of Inputs	0-1 group of A and /A(or GND) 2-3 group of B and /B(or GND) 4-5 group of G and /G(or GND)	
Output Specification		
Number of Outputs	6-7 Status Output	
Output Control	Output can be tied to any of 13 State	
Output Supply Voltage Range	5 to 28.8Vdc (HSC Status Output)	
On State Voltage Drop	Max. 0.3Vdc	
On State Current	Max. 1mA	
Off State Leakage	Max. 0.5mA	
Output Singnal Delay	OFF to ON : Max. 0.5ms ON to OFF : Max. 1ms	
Indicator	1Green Status	
Output Current Rating	Max. 0.5A	
Surge Current	1.5A for 10ms, repeatable every 3 seconds	
Fusing	Outputs are electronically protected	
Output Type	Sink type	
Over Current Protection	1.8A(Shutdown Current)	
General Specification		
Power Dissipation	Max. 80mA @ 5.0Vdc	
Isolation	I/O to Logic : Photocoupler isolation	
Wiring	I/O Cable Max. 2.0㎟ (AWG 14)	
Weight	70g	
Module Size	12mm x 99mm x 70mm	
Environment Condition	Refer to " Environment Specification"(page : 1-257)	

Pin No	Description
0	A Pulse Input
1	/A Pulse Input or GND
2	B Pulse Input
3	/B Pulse Input or GND
4	G Pulse Input
5	/G Pulse Input or GND
6	F24V
7	Status Output (Sink)

(주)크레비스 TEL:031-206-8077~8 http://www.crevis.co.kr e-mail : crevis@crevis.co.kr

Wire diagram

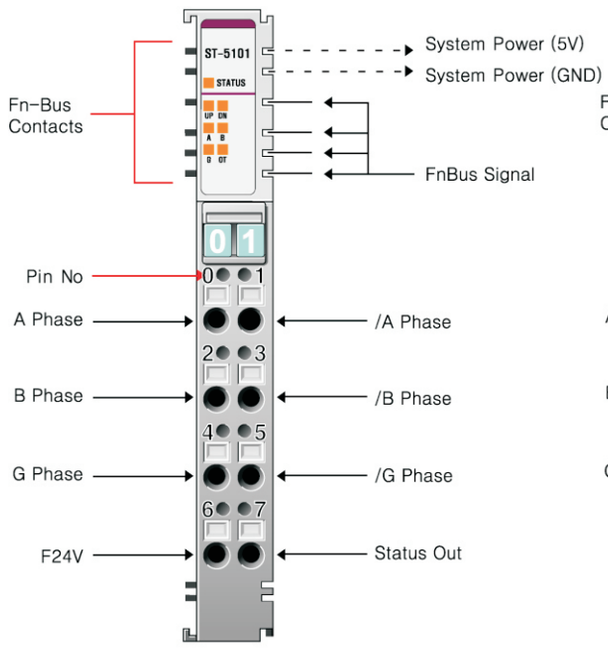

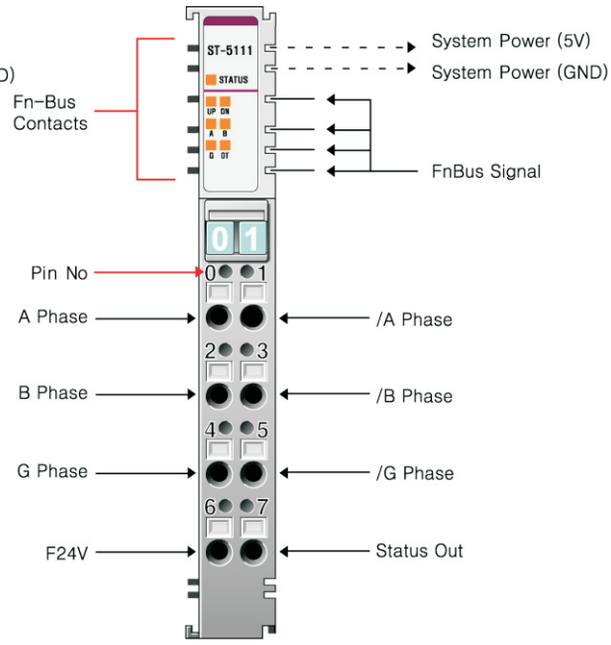

(1) Open Collector

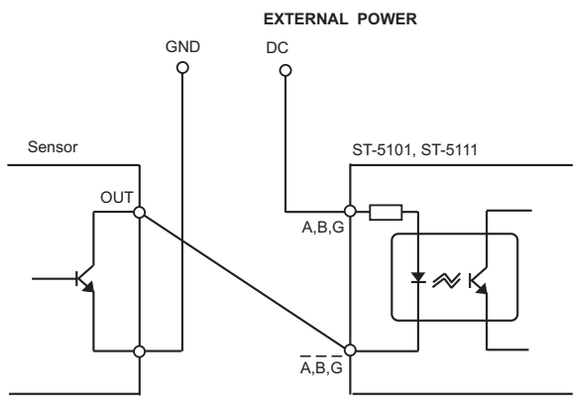

(2) VOLTAGE OUTPUT

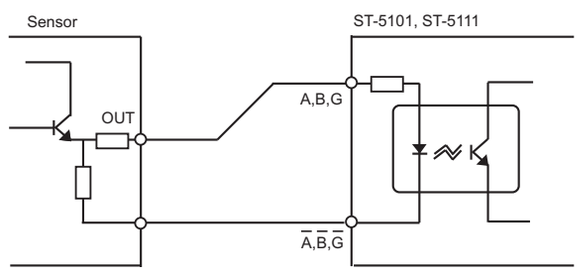

(3) LINE DRIVE

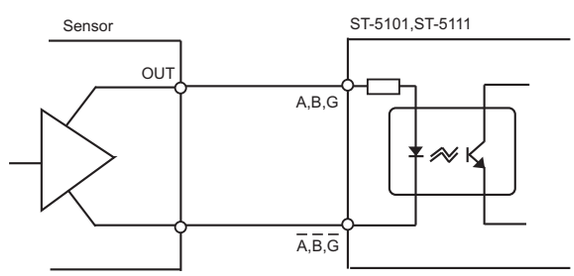

(4) SINK OUTPUT (STATUS)

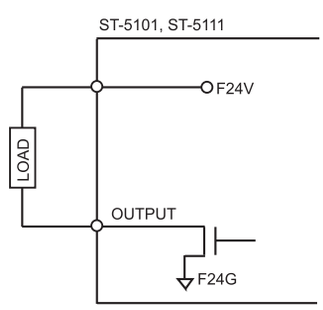

I/O Process Image Table

Input Data

Byte Offset	Decimal Bits Bit 7	Bit 6	Bit 5	Bit 4	Bit 3	Bit 2	Bit 1	Bit 0
Byte #0	Current Count Value (Low) when IDS=0 Stored Count Value (Low) when IDS=1							
Byte #1	Current Count Value (Middle) when IDS=0 Stored Count Value (Middle) when IDS=1							
Byte #2	Current Count Value (High) when IDS=0 Stored Count Value (High) when IDS=1							
Byte #3	Always 0							
Byte #4	Status Low (Compared flags)							
	0	0	SUF	SOF	SEQL	SEQ	SLT(<)	SGT(>)
Byte #5	Status High (same as LED Display)							
	0	0	SOT	SGIN	SBIN	SAIN	SDN	SUP

Output Data

Byte Offset	Decimal Bits Bit 7	Bit 6	Bit 5	Bit 4	Bit 3	Bit 2	Bit 1	Bit 0
Byte #0	Output Terminal (OT) Control							
	Output Terminal Selection "0000" : Force Off "0001" : GT "0010" : LT "0011" : EQ "0101" : Overflow "0110" : Underflow "1001" : Count Up "1010" : Count Down "1011" : A Terminal Input "1100" : B Terminal Input "1101" : G Terminal Input "1110" : PWM Output "1111" : Force On Others : Force Off				Output Terminal Pulse Width "0000" : Bypass "0001" : 1msec "0010" : 5msec "0011" : 10msec "0100" : 20msec "0101" : 50msec "0110" : 100msec "0111" : 200msec "1000" : 500msec "1111" : Latched Others : Bypass			
Byte #1	Command or PWM duty value (PWM Output Mode)							
	Command	Bit7	Bit6	Bit5	Bit4	Bit3	Bit2	Bit1	Bit0
		HRST	CR	CP	CST	PU	PO	PE	IDS
	PWM Duty value	0~100dec (=0~100%)							

Input Data Byte #4
SUF : Status Underflow(Latched)
SOF : Status Overflow(Latched)
SEQL(=) : Status Current count value = Compare count value (Latched)
SEQ(=) : Status Current count value = Compare count value (Unlatched)
SLT(<) : Status Current count value < Compare count value (Unlatched)
SGT(>) : Status Current count value > Compare count value (Unlatched)

Input Data Byte #5
SOT : Status Output Terminal (same as OT)
SGIN : Status G Terminal Input
SBIN : Status B Terminal Input
SAIN : Status A Terminal Input
SDN : Status Counter Down
SUP : Status Counter Up

Output Data Byte #1
HRST : HSC Reset
CR : Counter Reset, Current count value=0
CP : Counter Preset, Current count value=Initial count value
CST : Clear Status(SOT,SUF,SOF,SEQL)
PO : Process Overflow
PU : Process Underflow
PE : Process Equal
IDS : Input Data Selection(0:Current count value, 1:Stored count value)

(주)크레비스 TEL:031-206-8077~8 http://www.crevis.co.kr e-mail : crevis@crevis.co.kr

Configuration Parameter Table

Offset	Access	Description					
Byte#0	R/W	00-03	3	2	1	0	Counter Mode
			0	0	0	0	Counter Disabled
			0	0	0	1	1 Pulse Mode (A : Pulse, B : Direction)
			0	0	1	0	2 Pulse Mode (A : Up Pulse, B : Down Pulse)
			0	0	1	1	Encoder x1 (A : Aph B : Bph)
			0	1	0	0	Encoder x2 (A : Aph B : Bph)
			0	1	0	1	Encoder x4 (A : Aph B : Bph)
			0	1	1	0	Period/Rate Mode(Gate Function Disabled)
			0	1	1	1	Reserved
			1	0	0	0	PWM Output Mode(Gate Function Disabled)
			1	0	0	1	Reserved
					others		Counter Disabled
		04-07	7	6	5	4	Gate Function
			0	0	0	0	Gate Function Disabled
			0	0	0	1	Store / Continue
			0	0	1	0	Store / Wait / Resume
			0	0	1	1	Store-Reset / Wait / Start
			0	1	0	0	Store-Reset / Start
					others		Gate Function Disabled
Byte#1		00-03	3	2	1	0	Input Filter
			0	0	0	0	Bypass (about 1.5Mhz)
			0	0	0	1	1usec ±30%
			0	0	1	0	5usec ±30%
			0	0	1	1	10usec ±30%
			0	1	0	0	50usec ±30%
			0	1	0	1	100usec ±30%
			0	1	1	0	500usec ±30%
			0	1	1	1	1msec ±30%
			1	0	0	0	5msec ±30%
			1	0	0	1	10msec ±30%
					others		Bypass (about 1.5Mhz)
		04-07	7	6	5	4	Gate Sampling Time
			0	0	0	0	(10/1) Mhz (0.1us)
			0	0	0	1	(10/2) Mhz (0.2us)
			0	0	1	0	(10/4) Mhz (0.4us)
			0	0	1	1	(10/8) Mhz (0.8us)
			0	1	0	0	(10/16) Mhz (1.6us)
			0	1	0	1	(10/32) Mhz (3.2us)
			0	1	1	0	(10/64) Mhz (6.41us)
			0	1	1	1	(10/128) Mhz (12.8us)
					others		(10/1) Mhz (0.1us)